RS-ECTHPH-N01-TR-1-EX
Soil temperature moisture conductivity PH four-in-one transmitter
Type 485 Instruction Manual

Content

1.product description 3
1.1product description 3
1.2Features 3
1.3 technical parameter 3
1.4product model 4
2.Dimensions 4
3.Instructions 5
3.1 Quick test method 5
3.2 Buried Surveying 6
3.3 Precautions 6
4.Equipment Installation Instructions 6
4.1 Equipment pre-installation inspection 7
4.2 Interface Description 7
4.3 Wiring Instructions 7
5.Configuration software installation and use 7
5.1 software selection 7
5.2 parameter settings 8
6.letter of agreement 8
6.1Communication basic parameters 8
6.2 Data Frame Format Definition 9
6.3 register address 9
6.4 Communication protocol example and explanation 11
7. Common problems and solutions ..... 错误！未定义书签。
7.1The device cannot be connected to the PLC or computer 11
8. Contact information 12

1.product description

1.1product description

The transmitter has stable performance, high sensitivity, fast response and stable output, and is suitable for various soil types. It is an important tool to observe and study the occurrence, evolution, improvement and water-salt dynamics of saline soil. By measuring the dielectric constant of soil, it can directly and stably reflect the real moisture content of various soils. It can measure the volume percentage of soil moisture, which is a soil moisture measurement method in line with current international standards. It can be buried in the soil for a long time, resistant to long-term electrolysis, corrosion resistance, vacuum potting, and completely waterproof.

The transmitter is suitable for soil moisture monitoring, scientific experiments, water-saving irrigation, greenhouses, flowers and vegetables, grassland pastures, soil rapid testing, plant cultivation, sewage treatment, precision agriculture and other occasions temperature and humidity, conductivity, PH value testing .

1.2Features

1) Four parameters of soil moisture content, electrical conductivity, temperature and PH value are integrated into one.

2) The threshold is low, the steps are few, the measurement is fast, no reagents are required, and the number of tests is not limited.

3) The electrode is made of alloy material with special treatment, which can withstand strong external impact and is not easy to be damaged.

4) Completely sealed, resistant to acid and alkali corrosion, and can be buried in soil or directly into water for long-term dynamic testing.

5) High precision, fast response, good interchangeability, probe insertion design ensures accurate measurement and reliable performance.

6) It can also be used for the conductivity of water and fertilizer integrated solution, as well as other nutrient solutions and substrates.

1.3 technical parameter

DC power supply (default)	DC 4.5-30V	
Maximum power consumption	0.5W（24V DC powered by）	
Operating temperature	-20℃~+60℃	
Core chip temperature resistance	85℃	
Conductivity parameter	range	0-20000us/cm
	Resolution	1us/cm

	precision	0-10000us/cm±3% in range; 10000-20000us/cm±5% in range （Brown soil, 60%RH, 25℃）
Soil Moisture Parameters	range	0-100%
	Resolution	0.1%
	precision	0-50% Inside ±2%，50-100% Inside ±3% （Brown soil, 60%, 25℃）
Soil Temperature Parameters	range	-40~80℃
	Resolution	Resolution：0.1℃
	precision	±0.5℃（25℃）
Soil pH Parameters	range	3~9PH
	Resolution	0.1
Response time	≤1S	
stable schedule	≤5min	
Protection class	IP68	
Probe material	Anti-corrosion special electrode	
Sealing material	Black flame retardant epoxy resin	
Default cable length	2 meters, cable length can be customized	
Dimensions	45*15*123mm	
output signal	RS485 (Modbus protocol)	

1.4product model

RS-				company code
	ECTHPH-			Conductivity temperature moisture PH value four-in-one transmitter
		N01-		RS485 (Modbus-RTU protocol)
			TR-1	Soil Detection Shell
			EX	Export products

2.Dimensions

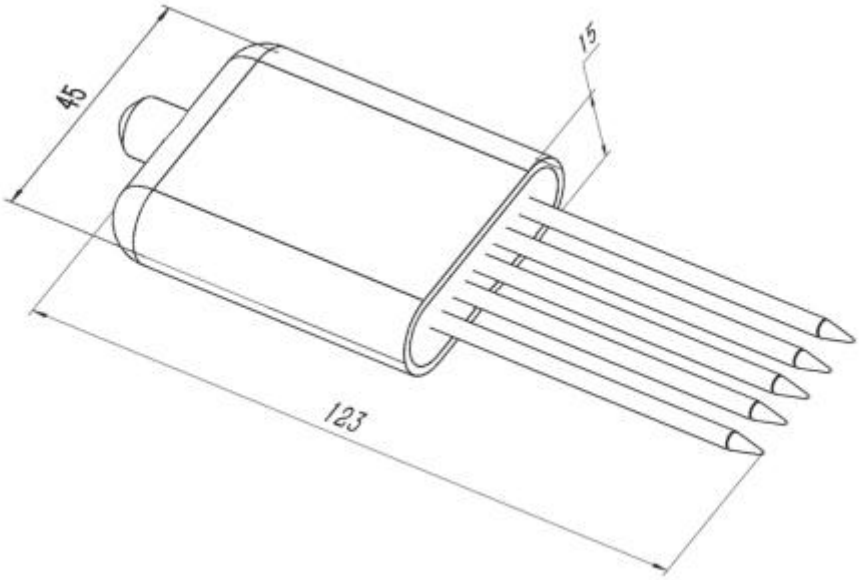

Equipment dimension drawing (unit: mm)

3.Instructions

Since the electrode directly measures the conductivity of the soluble salt ions in the soil, the soluble ions in the soil can correctly reflect the conductivity of the soil when the soil volumetric water content is higher than about 20%. In long-term observations, measurements after irrigation or rainfall are closer to the true level. If a quick test is performed, the soil to be tested can be watered first, and the measurement can be performed after the water has fully penetrated.

If you are measuring on a hard surface, you should first drill a hole (the hole diameter should be smaller than the diameter of the probe), then insert it into the soil and compact the soil before measuring; the transmitter should prevent violent vibration and impact, and it should not be knocked with hard objects. hit. Since the transmitter is packaged in black, the transmitter will heat up rapidly (up to 50°C or more) under strong sunlight. In order to prevent the temperature measurement of the transmitter from being affected by excessive temperature Pay attention to sunshade and protection when using.

3.1 Quick test method

Select a suitable measurement location, avoid stones, ensure that the steel needle does not touch hard objects, discard the topsoil according to the required measurement depth, maintain the original tightness of the soil below, firmly hold the sensor and insert it into the soil vertically, insert It is not allowed to shake left and right. It is recommended to measure multiple times within a small range of a measuring point to obtain an average value.

3.2 Buried Surveying

Dig a pit with a diameter >20cm vertically, insert the transmitter steel needle into the pit wall horizontally at a given depth, and fill the pit tightly. Record.

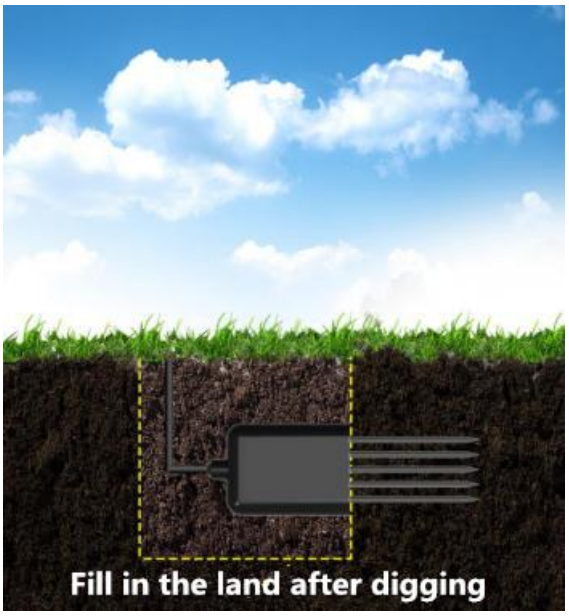

3.3 Precautions

1. The steel needle must be fully inserted into the soil when measuring.

2. Avoid direct sunlight on the transmitter and cause the temperature to be too high. Pay attention to lightning protection when using in the field.

3. Do not bend the steel needle violently, do not pull the lead wire of the transmitter forcibly, and do not beat or violently hit the transmitter.

4. The protection level of the transmitter is IP68, and the entire transmitter can be soaked in water.

5. Due to the existence of radio frequency electromagnetic radiation in the air, it is not suitable to

be energized in the air for a long time.

6. It should be calibrated before each measurement. It is recommended to calibrate every 1 month for long-term use. The calibration frequency should be adjusted according to different application conditions (soil quality, moisture content, salt content, pH, etc. of the application)

4.Equipment Installation Instructions

4.1 Equipment pre-installation inspection

Equipment List:

1. 1 transmitter equipment

2. Qualification certificate, warranty card, wiring instructions, etc.

3.USB to 485 (optional)

4.2 Interface Description

Wide voltage power input can be 4.5~30V. When wiring the 485 signal line, pay attention that the A/B lines cannot be reversed, and the addresses of multiple devices on the bus cannot conflict.

4.3 Wiring Instructions

thread color	illustrate	Remark
brown	V+	4.5~30V DC
black	power ground	GND
yellow	485-A	485-A
blue	485-B	485-B

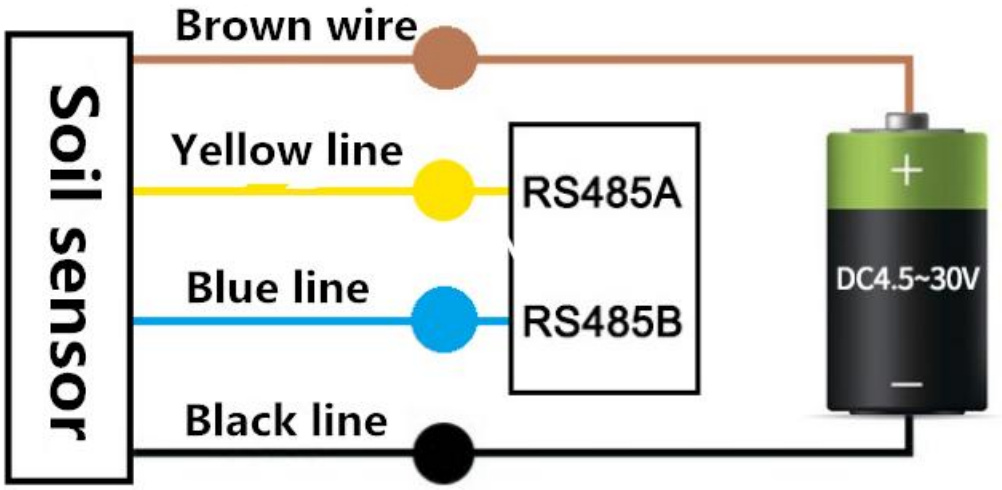

5.Configuration software installation and use

5.1 software selection

Open the data package, select "Debugging Software"---"485 Parameter Configuration

Software",turn up

Just open it.

5.2 parameter settings

1. Select the correct COM port (check the COM port in "My Computer - Properties - Device Manager - Port"), the following figure lists the driver names of several different 485 converters.

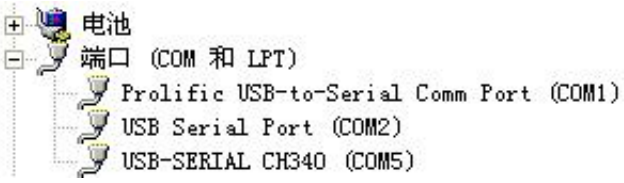

②. Only connect one device and power it on, click the test baud rate of the software, the software will test the baud rate and address of the current device, the default baud rate is 4800bit/s, and the default address is 0x01.

③. Modify the address and baud rate according to the needs of use, and at the same time, you can query the current functional status of the device.

④. If the test is unsuccessful, please re-check the wiring of the equipment and the installation of the 485 driver.

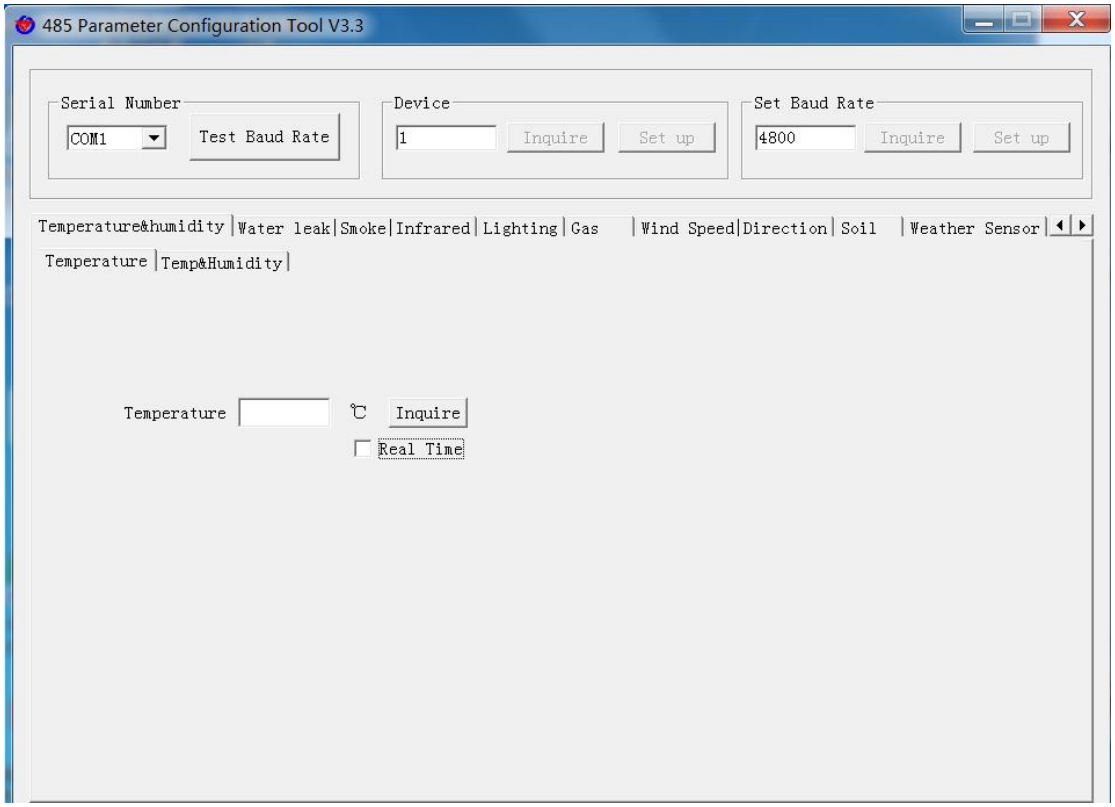

6.letter of agreement

6.1Communication basic parameters

coding	8 bit binary

data bits	8 bits
parity bit	none
stop bit	1 person
error checking	CRC (Redundant Cyclic Code)
baud rate	Can be set, the factory default is 4800bit/s

6.2 Data Frame Format Definition

Using Modbus-RTU communication protocol, the format is as follows:

Initial structure ≥4 bytes of time

Address code = 1 byte

Function code = 1 byte

Data area = N bytes

Error check = 16-bit CRC code

Time to end structure ≥ 4 bytes

Address code: the address of the transmitter, which is unique in the communication network (factory default 0x01).

Function code: the function instruction of the command sent by the host.

Data area: The data area is the specific communication data, pay attention to the high byte of the 16bits data first!

CRC code: two-byte check code.

Host query frame structure:

address code	function code	register start address	register length	Check code low byte	Check code high byte
1byte	1byte	2byte	2byte	1byte	1byte

Slave response frame structure:

address code	function code	number of valid bytes	data area	Data 2 area	Data N area	Check code low byte	Check code high byte
1byte	1byte	1byte	2byte	2byte	2byte	1byte	1byte

6. 3 register address

register address	PLC or configuration address	content	operate	Definition Description
0000 H	40001 (decimal)	moisture content	read	Moisture content real-time

			only	value (expanded 10 times)
0001 H	40002 (decimal)	temperature value	read only	Temperature real-time value (expanded 10 times)
0002 H	40003 (decimal)	Conductivity	read only	Conductivity real-time value
0003 H	40004 (decimal)	pH value	read only	PH real-time value (expanded tenfold)
0004 H	40005 (decimal)	salinity	read only	real-time salinity
0005 H	40006 (decimal)	total dissolved solids TDS	read only	TDS real-time value
0022 H	40035 (decimal)	temperature coefficient of conductance	read and write	0-100 corresponds to 0.0%-10.0% Default 0.0%
0023 H	40036 (decimal)	salinity coefficient	read and write	0-100 corresponds to 0.00-1.00 Default 55 (0.55)
0024 H	40037 (decimal)	TDS factor	read and write	0-100 corresponds to 0.00-1.00 Default 50 (0.5)
0050 H	40081 (decimal)	temperature calibration value	read and write	Integer (expanded by a factor of 10)
0051 H	40082 (decimal)	Moisture content calibration value	read and write	Integer (expanded by a factor of 10)
0052 H	40083 (decimal)	Conductivity calibration value	read and write	integer
0053 H	40083 (decimal)	pH calibration value	read and write	integer
07D0 H	42001 (decimal)	Device address	read and	1~254 (factory default 1)

			write	
07D1 H	42002 (decimal)	Device baud rate	read and write	0 means 2400 1 for 4800 2 for 9600

6. 4 Communication protocol example and explanation

Example: Read the temperature, moisture, conductivity and PH value of the conductivity, temperature, moisture, and PH four-in-one device (address 0x01).

query frame

address code	function code	starting address	Data length	Check code low byte	Check code high byte
0x01	0x03	0x00 0x00	0x00 0x04	0x44	0x09

acknowledgment frame

address code	function code	return valid number of bytes	Moisture value	temperature value	Conductivity value	pH value	Check code low byte	Check code high byte
0x01	0x03	0x08	0x02 0x92	0xFF 0x9B	0x03 0xE8	0x00 0x38	0x57	0xB6

Temperature calculation:

When the temperature is lower than 0 ℃, the temperature data is uploaded in the form of complement code.

Temperature: FF9B H(hex) = -101 => temperature = -10.1℃

Moisture calculation:

Moisture: 292 H (Hex) = 658 => Humidity = 65.8%, that is, the soil volume moisture content is 65.8%.

Conductivity calculation:

Conductivity: 3E8 H (hex) = 1000 Conductivity = 1000 us/cm

PH value calculation:

PH value: 38H (hexadecimal) = 56 => PH value = 5.6

7. Common problems and solutions

7.2 The device cannot be connected to the PLC or computer

possible reason:

1) The computer has multiple COM ports, and the selected port is incorrect.

2) The device address is wrong, or there are devices with duplicate addresses (the factory default is all 0x01).

3) Baud rate, check mode, data bit, stop bit error.

4) The 485 bus is disconnected, or the A and B lines are reversed.

5) If the number of devices is too large or the wiring is too long, power supply should be provided nearby, add a 485 booster, and at the same time increase a 120Ω terminal resistance.

6) The USB to 485 driver is not installed or damaged.

7) The equipment is damaged.

8. Contact information

Shandong Renke Control Technology Co., Ltd.
Address: 2 / F, East Block, Building 8, Shun Tai Plaza, High-tech Zone, Jinan City, Shandong Province
Post code: 250101
Phone: 400-085-5807
Website: www.renkeer.com

Cloud platform address: en.0531yun.cn Or: eniot.0531yun.cn

Web QR: